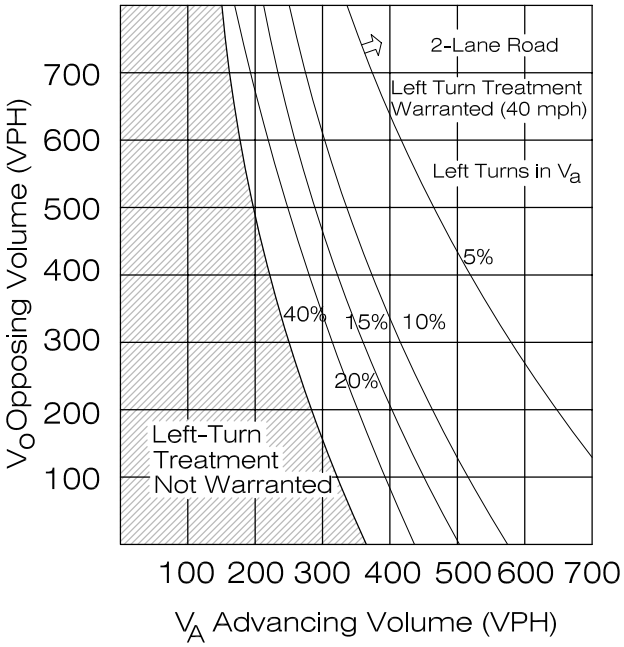

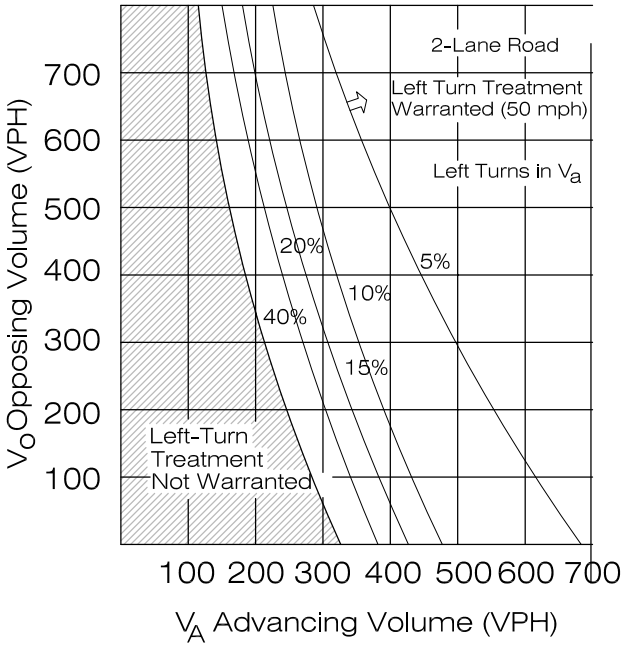

NOTE: When V_O < 400 VPH (dashed line). A Left-Turn Lane is not normally warranted unless the advancing volume (V_a) in the same direction as the Left-Turning traffic exceeds 400 VPH (V_a>400 VPH).

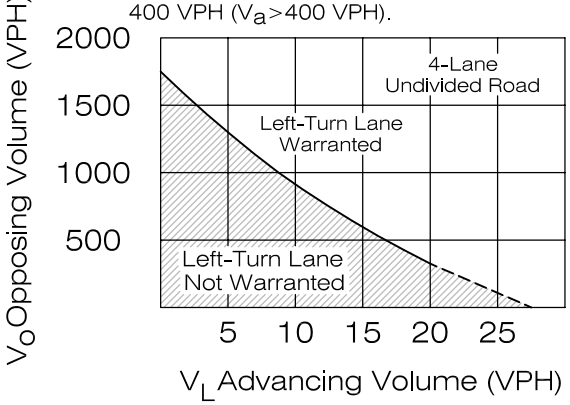

Notes: 1. Left turn lanes are required at all intersections and all-movement accesses on arterial roadways except where roundabouts are provided.

VOLUME WARRANTS FOR LEFT TURN LANES AT UNSIGNALIZED INTER.			
LARIMER COUNTY URBAN AREA STREET STANDARDS	DESIGN FIGURE	REVISION NO:	FIGURE
		DATE: 12/14/00	8-1

GUIDELINES FOR DESIGN OF LEFT TURN LANES

LARIMER COUNTY
URBAN AREA
STREET STANDARDS

DESIGN FIGURE

REVISION NO:

DATE: 08/07/00

FIGURE 8-2

L_d/b -- Length of Taper and Lane for Deceleration and Braking

Functional Basis: To provide sufficient length for a vehicle to decelerate and brake entirely outside the through traffic lanes.

Desirable Design: Deceleration in gear for 3 seconds (occurs over bay taper) followed by comfortable braking to a stopped position.

Design Values For L_d/b

S--Speed (mph)	Length (ft) Total	Lane	Bay Taper
30	235	115	(120)
40	315	155	(160)
50	435	235	(200)
60	530	290	(240)

Minimum Design: Braking begins at 2/3 full lane width, with minimum 50-foot storage. For low speeds only, the following values apply:

Design Values For L_d/b

S--Speed (mph)	Length (ft) Total	Lane	Bay Taper
30	230	50	(180)
35	250	70	(180)
40	280	100	(180)
45	320	140	(180)

L_s -- Length of Lane for Storage (Full Width Lane)

Functional Basis: To Provide sufficient length for a reasonable number of vehicles to queue within the lane without affecting other lanes.

Desirable Design: Based on twice the mean arrival rate (per cycle for signals, per 2-minute period for stop control) during the peak hour of traffic.

Minimum Design: Based on mean arrival rate, with minimum storage for one vehicle.

L_s for Stop Control

DHV (vph)	L_s (ft)
≤60	50-75
61-120	100
121-180	150
>180	200 or more

L_s for Traffic Signal Control

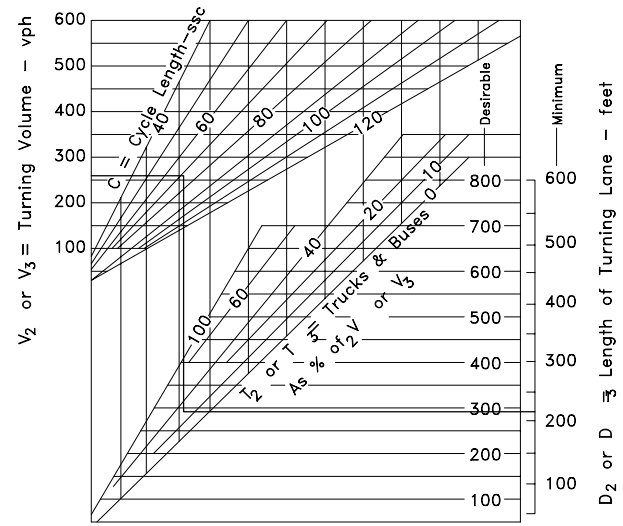

GUIDELINES FOR DESIGN TAPERS FOR LEFT TURN LANES

LARIMER COUNTY
URBAN AREA
STREET STANDARDS

DESIGN
FIGURE

REVISION NO:

DATE: 08/07/00

FIGURE
8-3

T_a -- Approach Taper Design (ft) (Redirect Taper)

Functional Basis: To provide a smooth lateral transition for all vehicles approaching the intersection.

Form of Alignment: Tangent

Low Speed Design: (<45) Provide a fully shadowed lane.

$$T_a = \frac{W S^2}{60}$$

W = Width of Offset (ft)
S = Speed (mph)

Typical Values for T_a*

S--Speed (mph)	W -- Width of Offset (ft) 11	11.5	12
25	115	120	125
30	165	170	180
35	225	235	245
40	295	305	320

*Rounded to nearest 5 ft.

High Speed Design: (≥45) Provide a fully shadowed lane. Design as follows:

$$T_a = WS$$

W = Width or Offset (ft)
S = Speed (mph)

S--Speed (mph)	W -- Width of Offset (ft) 11	11.5	12
45	495	520	540
50	550	575	600

*Rounded to nearest 5 ft.

T_b -- Bay Taper Design

Functional Basis: To direct left-turning vehicles into the turn lane.

Form of Alignment: Tangent; or reverse curves with 1/3 of the total length comprised of a central tangent.

Desirable Design: For fully shadowed left turn lane.

$$T_b = \frac{W_1 S}{3}$$

W_1 = Width of Lane
S = Speed (mph)

Typical Values for T_b*

S--Speed (mph)	W -- Width of Lane (ft) 11	12
30	110	120
40	145	160
50	185	200

*Rounded to nearest 5 ft.

Minimum Design: Taper ratios of 8:1 can be used for tangent bay tapers in constrained locations.

TRAFFIC VOL. GUIDELINES FOR DESIGN RIGHT TURN LANES

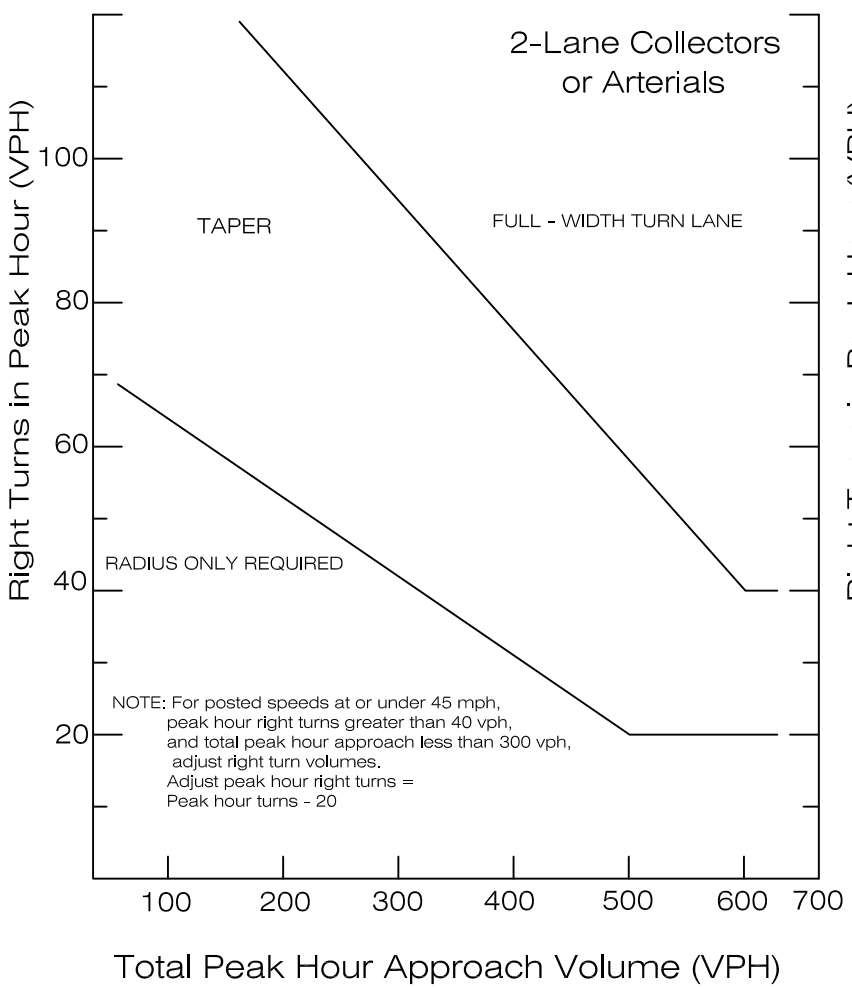

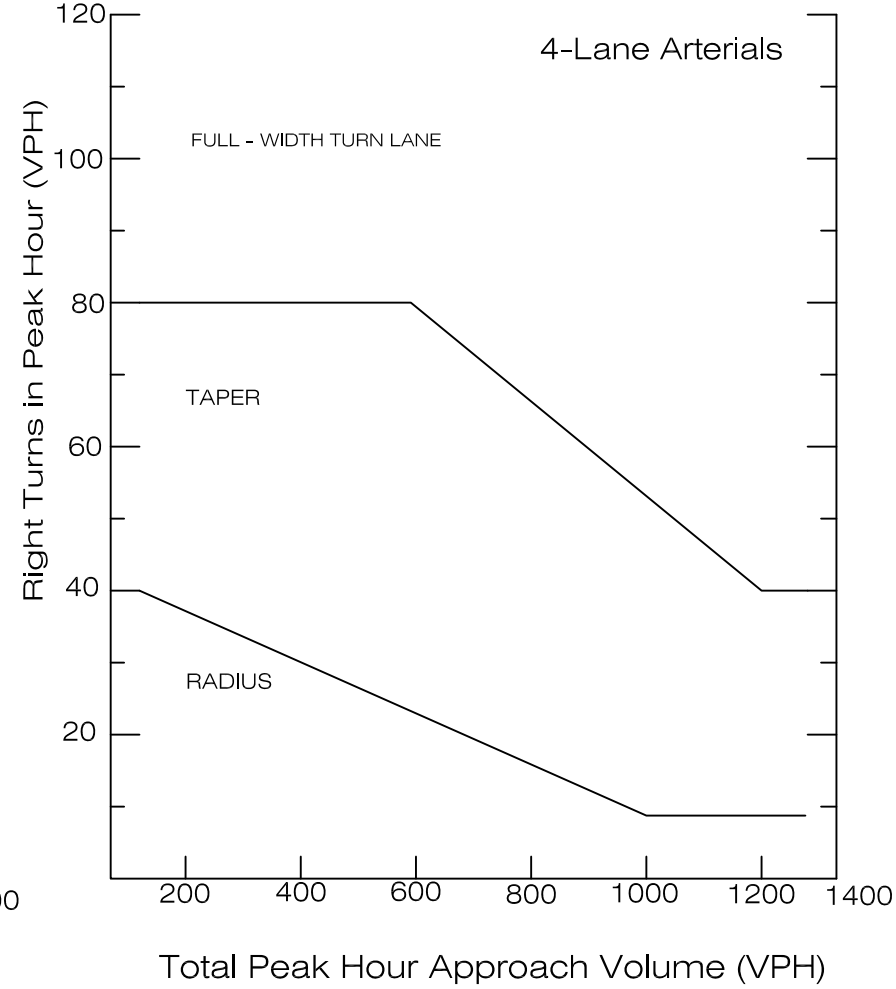

NOTE:
1. Right turn lanes are required on 6-lane arterial when the right turn volume exceeds 200 vph.
2. Refer to the National Cooperative Highway Research Program (NCHRP) Report 279 for more information

LARIMER COUNTY URBAN AREA STREET STANDARDS	DESIGN FIGURE	REVISION NO:
		DATE: 08/01/21
		FIGURE 8-4

GUIDELINES FOR DESIGN LENGTHS OF RIGHT TURN LANES

LARIMER COUNTY
URBAN AREA
STREET STANDARDS

DESIGN FIGURE

REVISION NO:

DATE: 08/01/21

FIGURE 8-5

$L_{d/b}$ -- Length of Taper and Lane for Deceleration and Braking (ft)

Functional Basis: To provide sufficient length for a vehicle to decelerate and brake entirely outside the through traffic lanes.

Desirable Design: Deceleration in gear for 3 seconds (occurs over bay taper) followed by comfortable braking to a stopped position or to the design speed of the corner radius.

Design Values For $L_{d/b}$

Highway Design Speed, V (mph)	Stop Condition*	Design Speed of Corner Radius (mph) 15	20	25	30
30	235	185	160	140	-
35	275	240	213	188	93
40	315	295	265	235	185
45	375	350	325	295	250
50	435	405	385	355	315

*Appropriate for right turn lanes in approaches to stop signs and traffic signals.

$$\text{Bay Taper Length} = \frac{WS}{3}$$

$$T_b = \frac{W_1 S}{3}$$

T_b -- Bay Taper Design

Functional Basis: To direct left-turning vehicles into the turn lane.

Form of Alignment: Tangent; or reverse curves with 1/3 of the total length comprised of a central tangent.

Desirable Design: For fully shadowed right turn lane.

$$T_b = \frac{W_1 S}{3}$$

W_1 = Width of Lane
S = Speed (mph)

Typical Values for T_b*

S--Speed (mph)	W_1 -- Width of Lane (ft) 11	12
30	110	120
40	145	160
50	185	200

*Rounded to nearest 5 ft.

Minimum Design: Taper ratios of 8:1 can be used for tangent bay tapers in constrained locations.

L_S -- Length of Lane for Storage (Full Width Lane) (ft)

Functional Basis: To Provide sufficient length for a reasonable number of vehicles to queue within the lane without affecting other lanes.

Desirable Design: Based on twice the mean arrival rate (per cycle for signals, per 2-minute period for stop control) during the peak hour of traffic.

Minimum Design: Based on mean arrival rate, with minimum storage for one vehicle.

L_S for Stop Control

DHV (vph)	L_S (ft)
≤60	50-75
61-120	100
121-180	150
>180	200 or more

Reference NCHRP 279

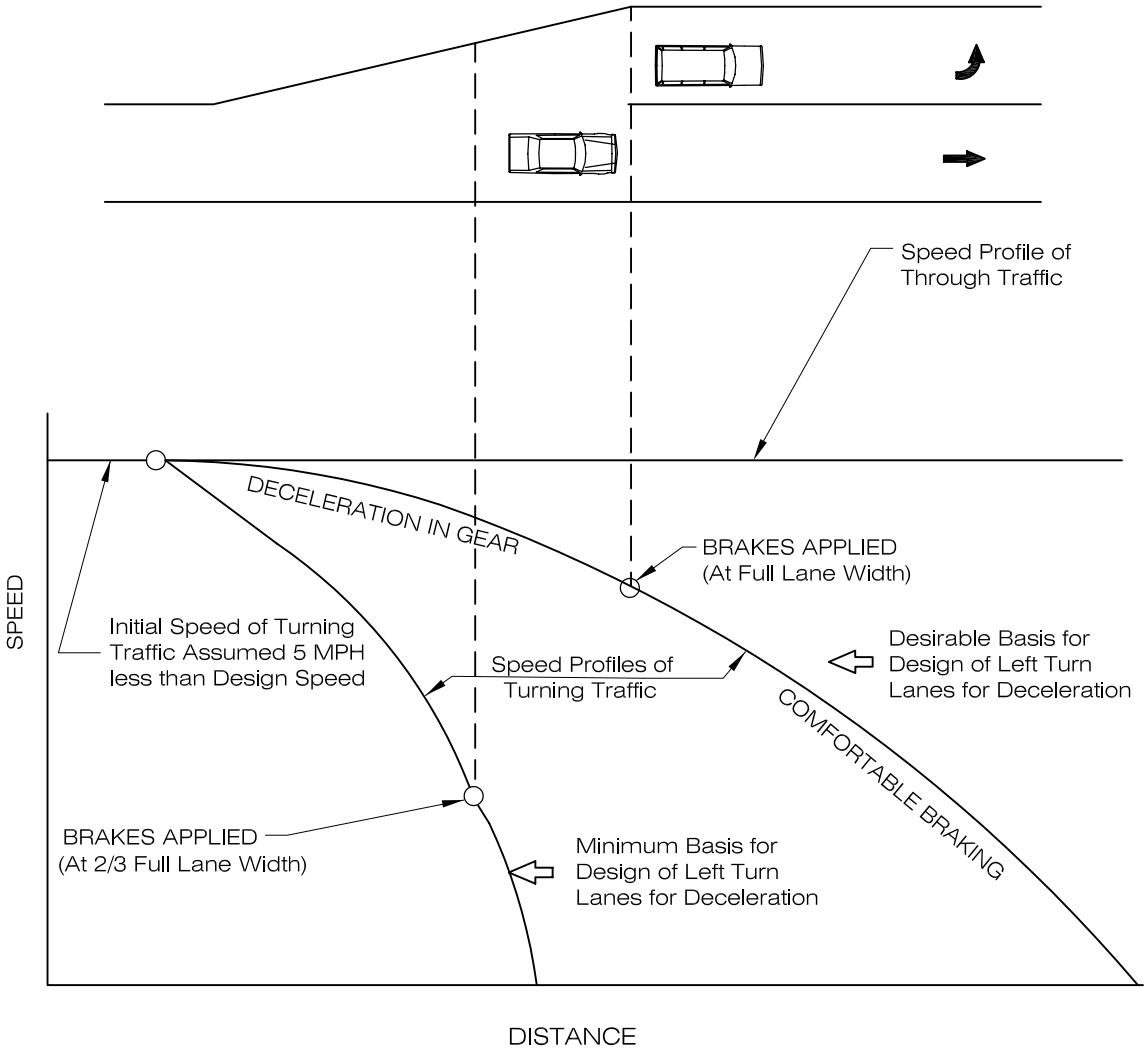

CONCEPTUAL

LEFT TURN LANE DECELERATION

LARIMER COUNTY URBAN AREA STREET STANDARDS	DESIGN FIGURE	REVISION NO:	FIGURE
		DATE: 12/14/00	8-6

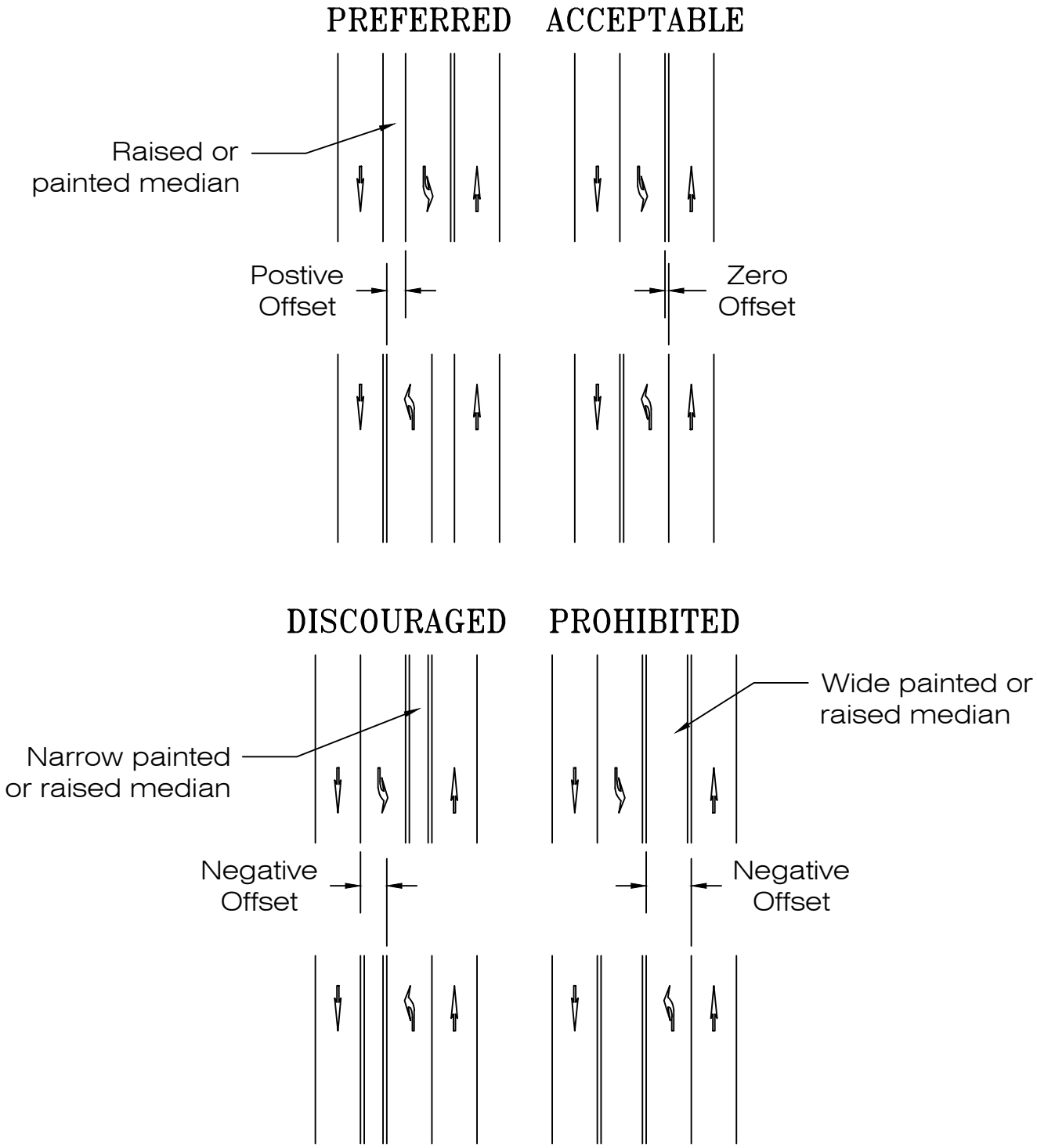

NOTES:

1. Positive offsetting of left turn bays allows opposing left turn movements to see around each other, generally improving safety of permissive left turn movements.

OPPOSING LEFT TURN BAY CONFIGURATIONS

LARIMER COUNTY URBAN AREA STREET STANDARDS	CONSTRUCTION DRAWINGS	REVISION NO:	FIGURE
		DATE: 08/01/21	8-7

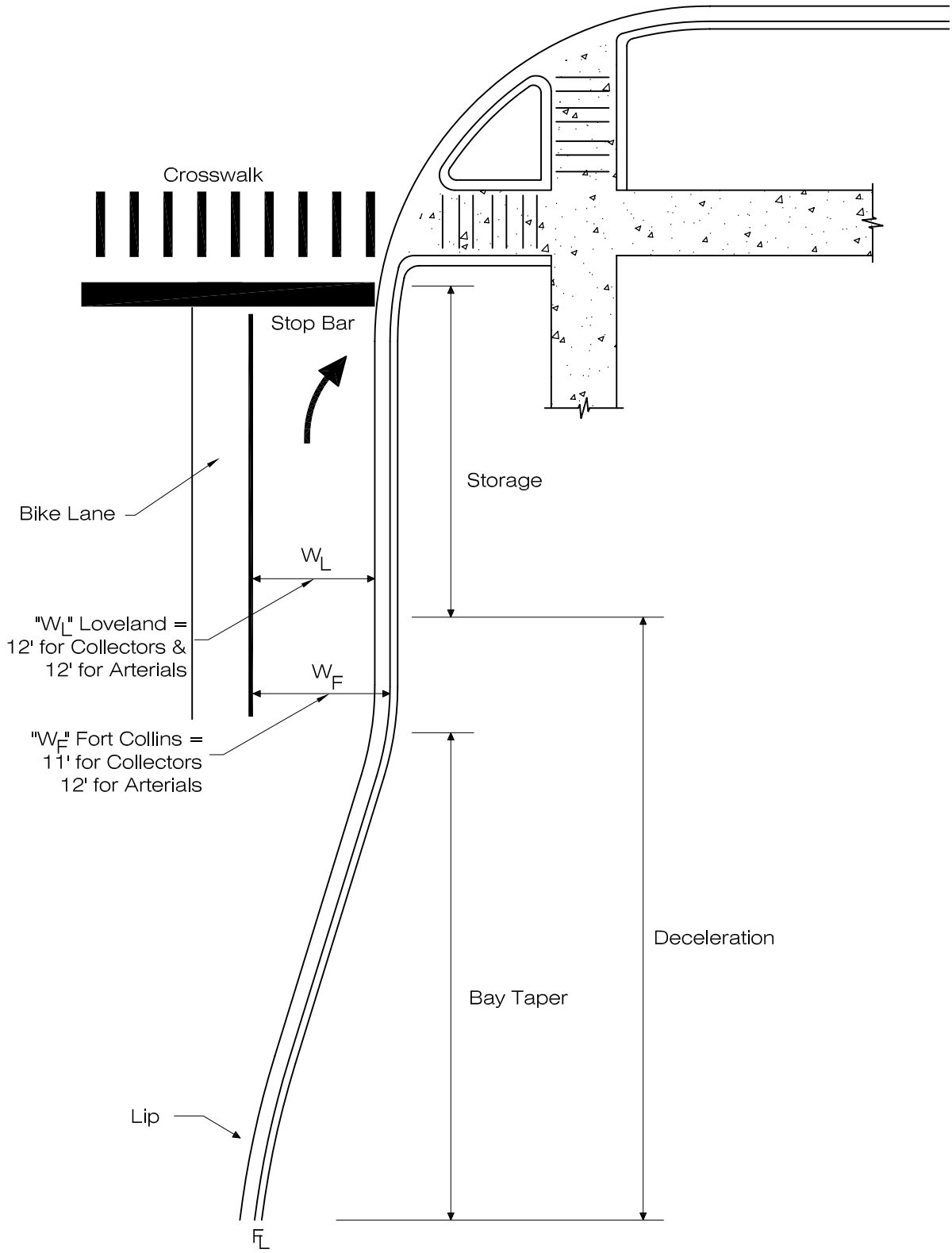

NOTE: 1) Refer to **Figure 8-5** for design requirements.
2) Provide a 50'± arc length at angle points for a smooth curve.

EXCLUSIVE RIGHT TURN

LARIMER COUNTY URBAN AREA STREET STANDARDS	DESIGN FIGURE	REVISION NO:	FIGURE
		DATE: 08/07/00	8-9

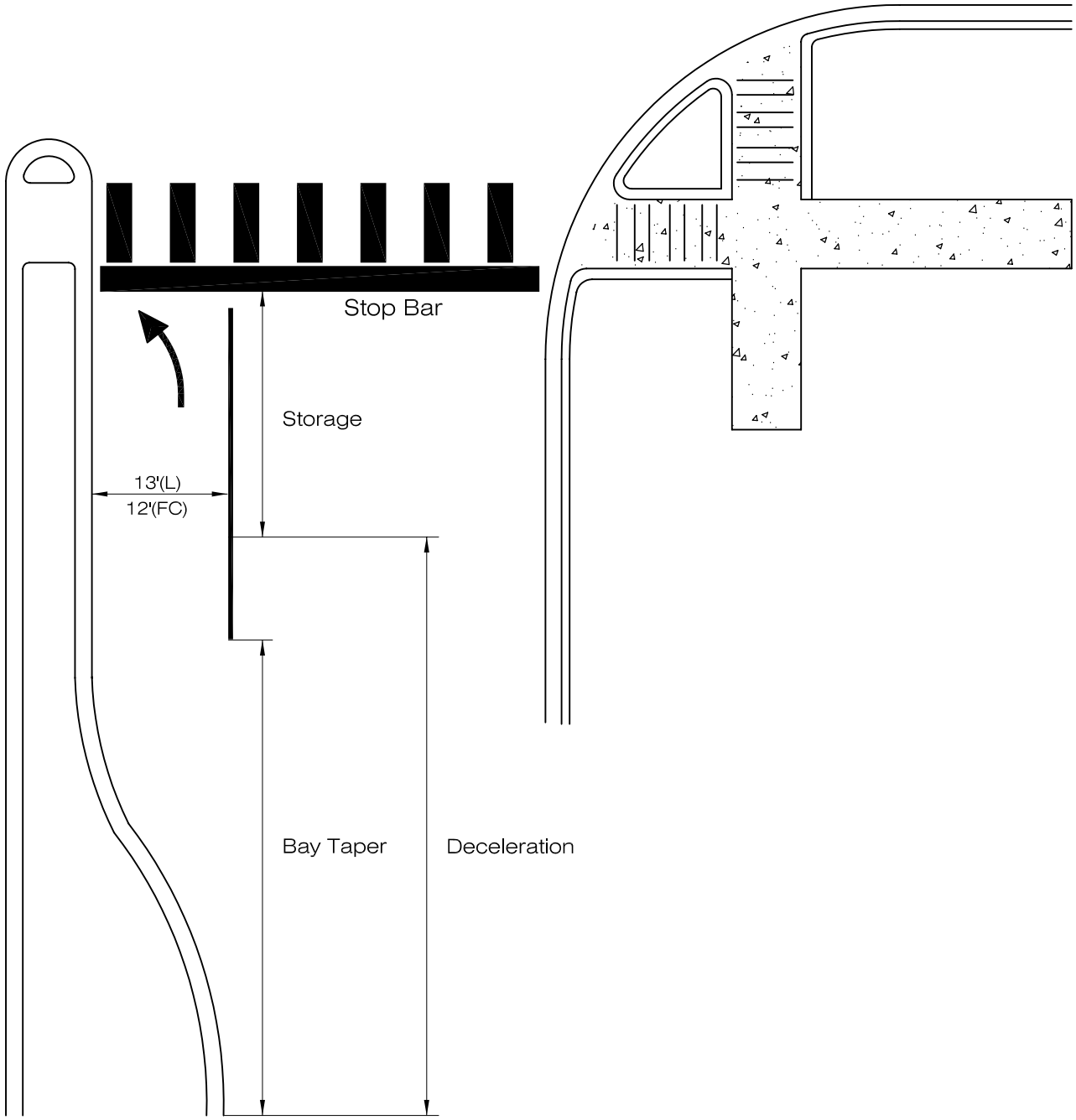

NOTES:
1. If high pedestrian area, then minimum median width is 7' flowline to flowline.
2. Refer to **Figures 8-2, 8-3 and 8-11** for design requirements.
3. Provide a 50'± arc length at angle points for a smooth curve.

EXCLUSIVE LEFT TURN

LARIMER COUNTY URBAN AREA STREET STANDARDS	DESIGN FIGURE	REVISION NO:	FIGURE
		DATE: 08/07/00	8-10

NOTE: Refer to Figure 8-3 for design requirements.

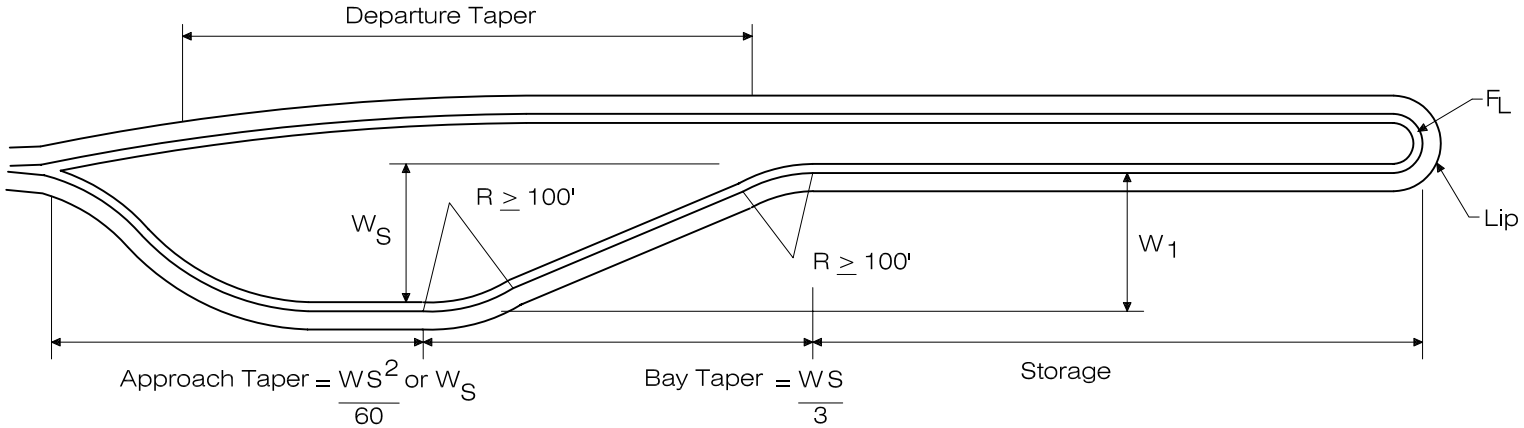

Left Turn Lane with Full Shadow

High Speed (≥45 MPH)

TAPER RATIOS				
TAPER TYPE	DESIGN SPEED			
	35	40	45	50
Bay	12:1	13.3:1	15:1	16.7:1
Approach	20:1	27:1	45:1	50:1
Depart	NA	NA	NA	NA
combined	20:1	27:1	45:1	50:1

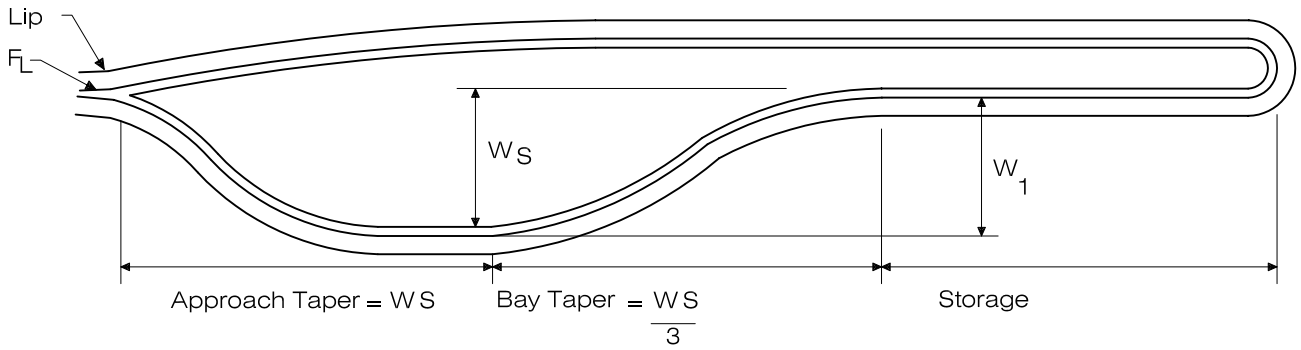

Left Turn Lane with Partial Shadow

TURN LANE DESIGN CRITERIA

LARIMER COUNTY
URBAN AREA
STREET STANDARDS

DESIGN FIGURE

REVISION NO: 1

DATE: 03/01/02

FIGURE 8-11

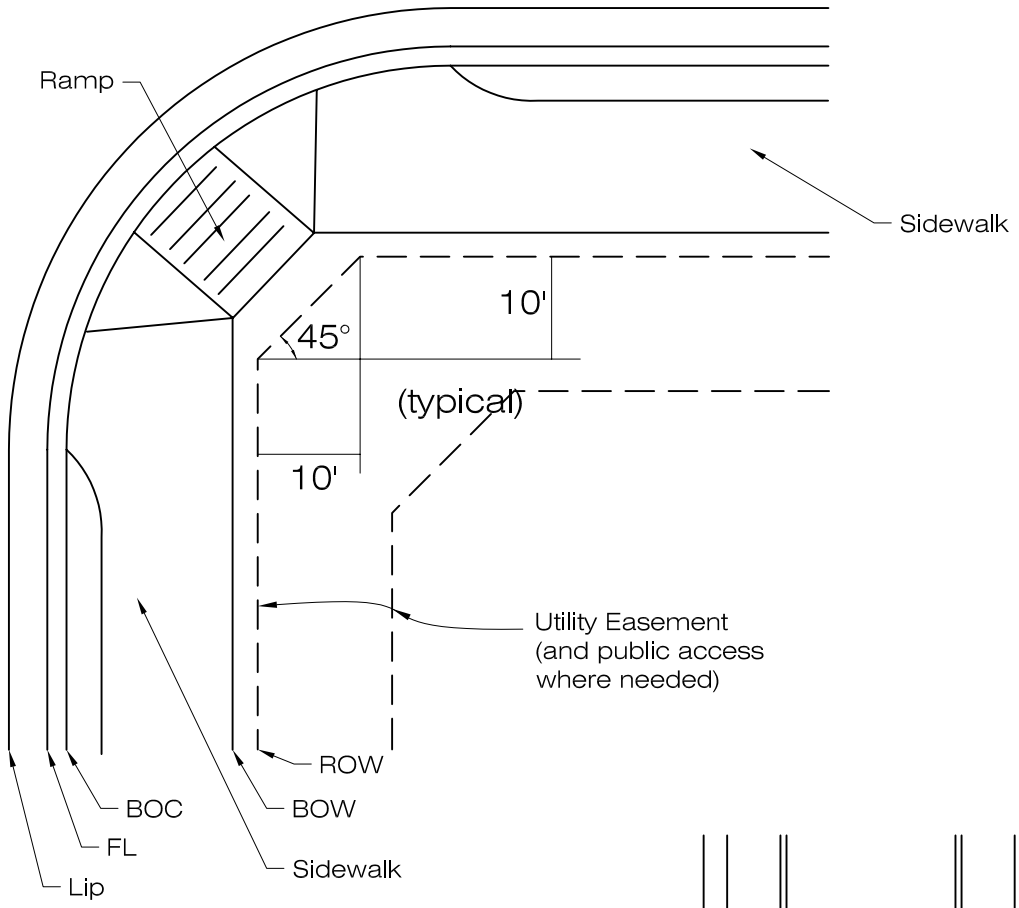

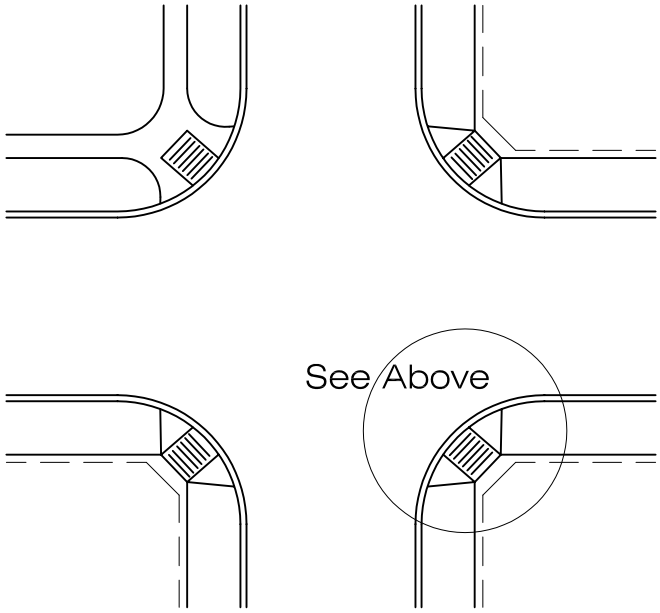

NOTE:

1. Right of Way must be dedicated in the form of a radius or corner cut to include all of the required public improvements. However, sidewalk may be placed in a public easement when approved by the Local Entity Engineer.
2. If intersection is determined to accommodate a roundabout in Loveland (GMA & City Limits), see **Figure 8-16L** for ROW requirements.
3. Easements at the corner must be dedicated to provide corner cuts similar to ROW.

RIGHT OF WAY REQUIREMENTS AT INTERSECTIONS

LARIMER COUNTY URBAN AREA STREET STANDARDS	DESIGN FIGURE	REVISION NO:	FIGURE
		DATE: 08/07/00	8-12

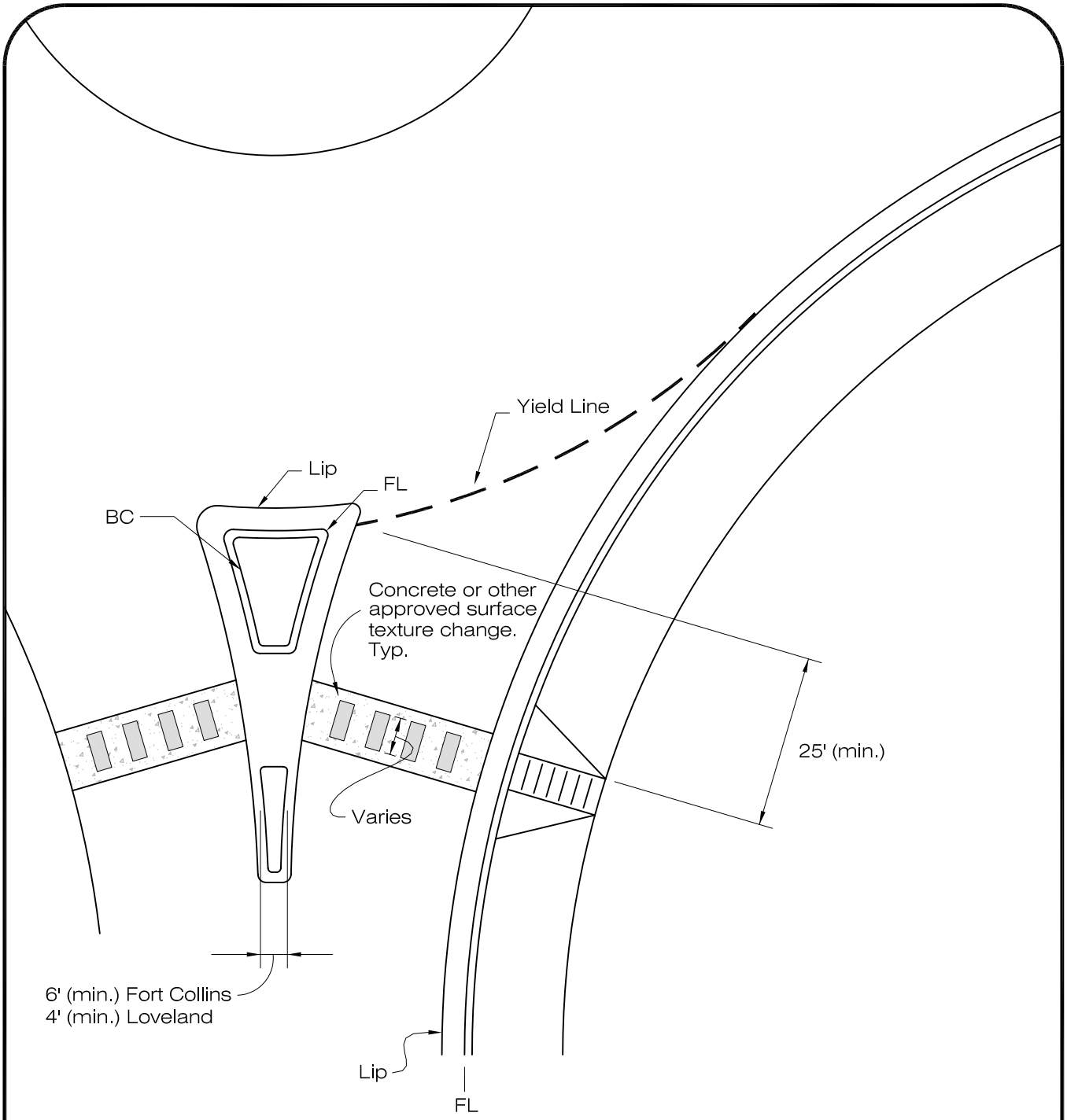

NOTES:
1. Each Splitter Island shall have a minimum width equal to the street classification sidewalk width and Refuge area that is in line with cross walks.
2. The specific design shall determine minimum radii and island lengths.
3. Raised crosswalk may be required by Local Entity.
4. Designer shall provide design to drain water out of pedestrian refuge.
5. Pedestrian refuge area shall be in line with crosswalks.
6. A mountable style curb and a decorative structural concrete surface shall be used for mini roundabouts that cannot accomodate WB50 and larger trucks solely on the roadway and truck apron surfaces.

SPLITTER ISLAND FOR MINI ROUNDABOUTS

LARIMER COUNTY URBAN AREA STREET STANDARDS	DESIGN FIGURE	REVISION NO: 1	FIGURE
		DATE: 03/01/02	8-13

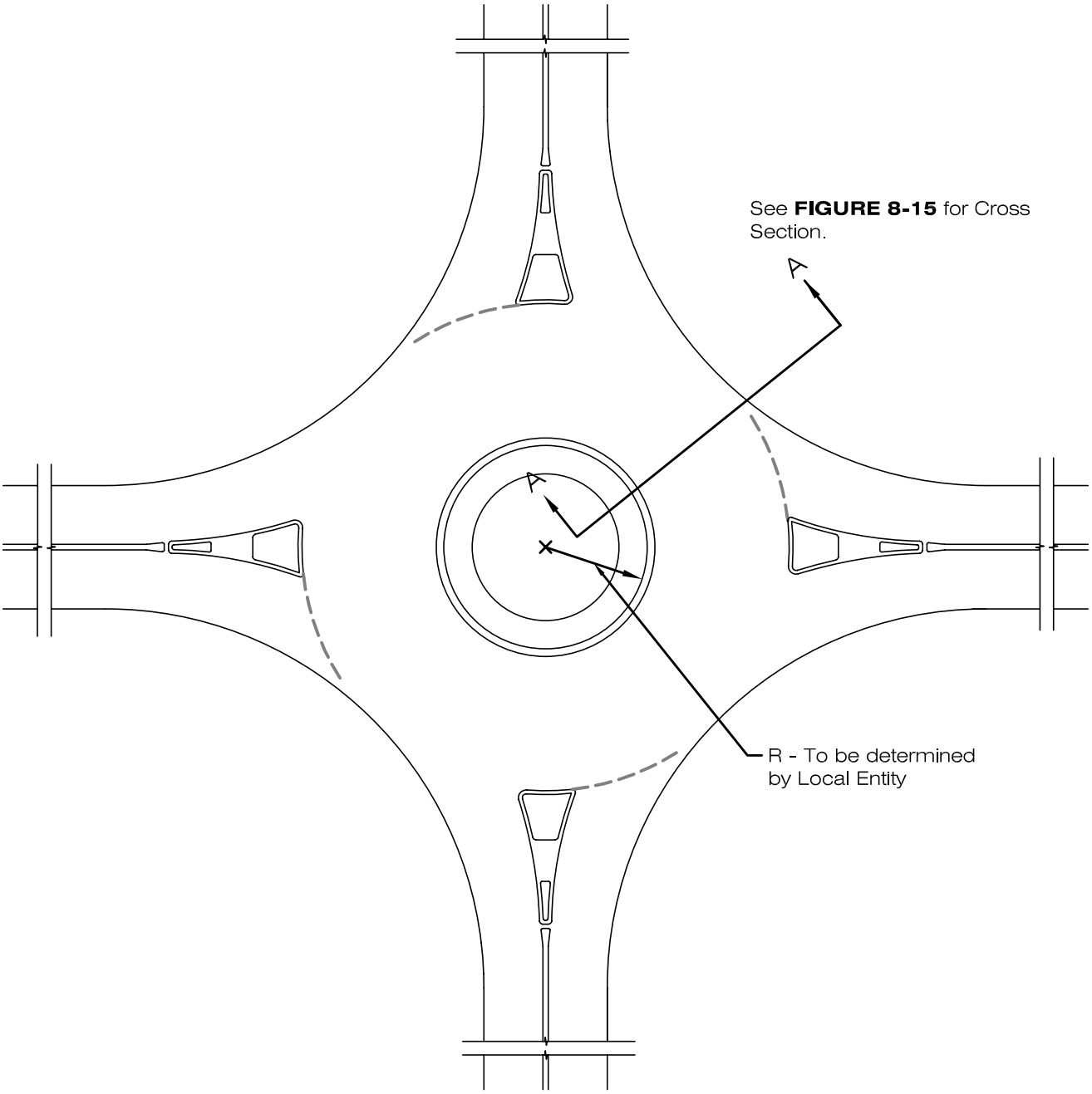

NOTE:
1. Refer to **Figure 14-2** for Mini Roundabout Sign Details & to **CONST. DWG. 802** for Barrier (Splitter Island) Details.

MINI ROUNDABOUT

LARIMER COUNTY URBAN AREA STREET STANDARDS	DESIGN FIGURE	REVISION NO: 2	FIGURE
		DATE: 04/01/07	8-14

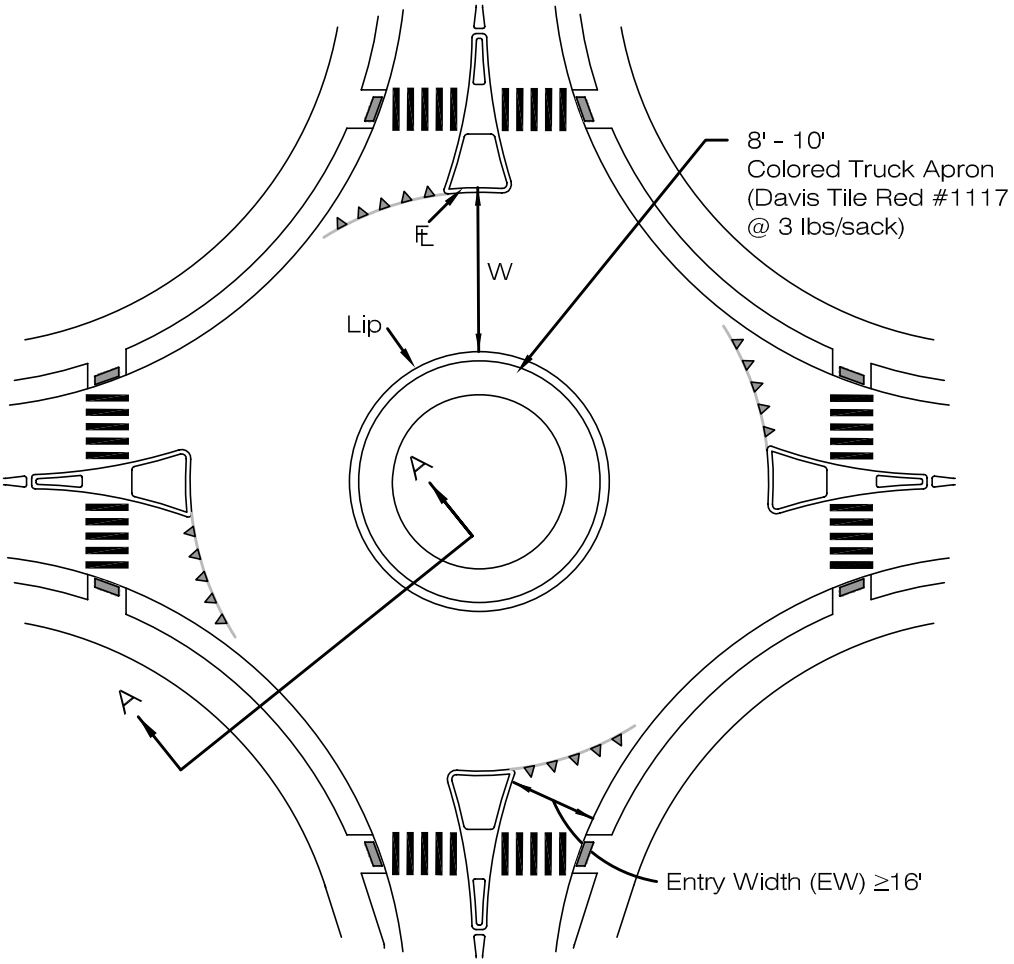

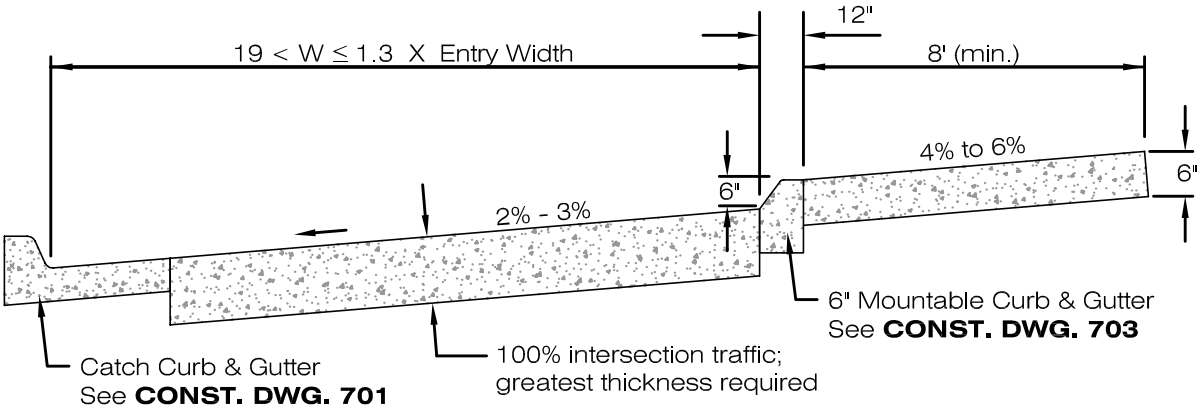

SECTION A-A

MINI ROUNDABOUT CROSS SECTION

LARIMER COUNTY URBAN AREA STREET STANDARDS	DESIGN FIGURE	REVISION NO: 2	FIGURE
		DATE: 04/01/07	8-15

LOVELAND ONLY

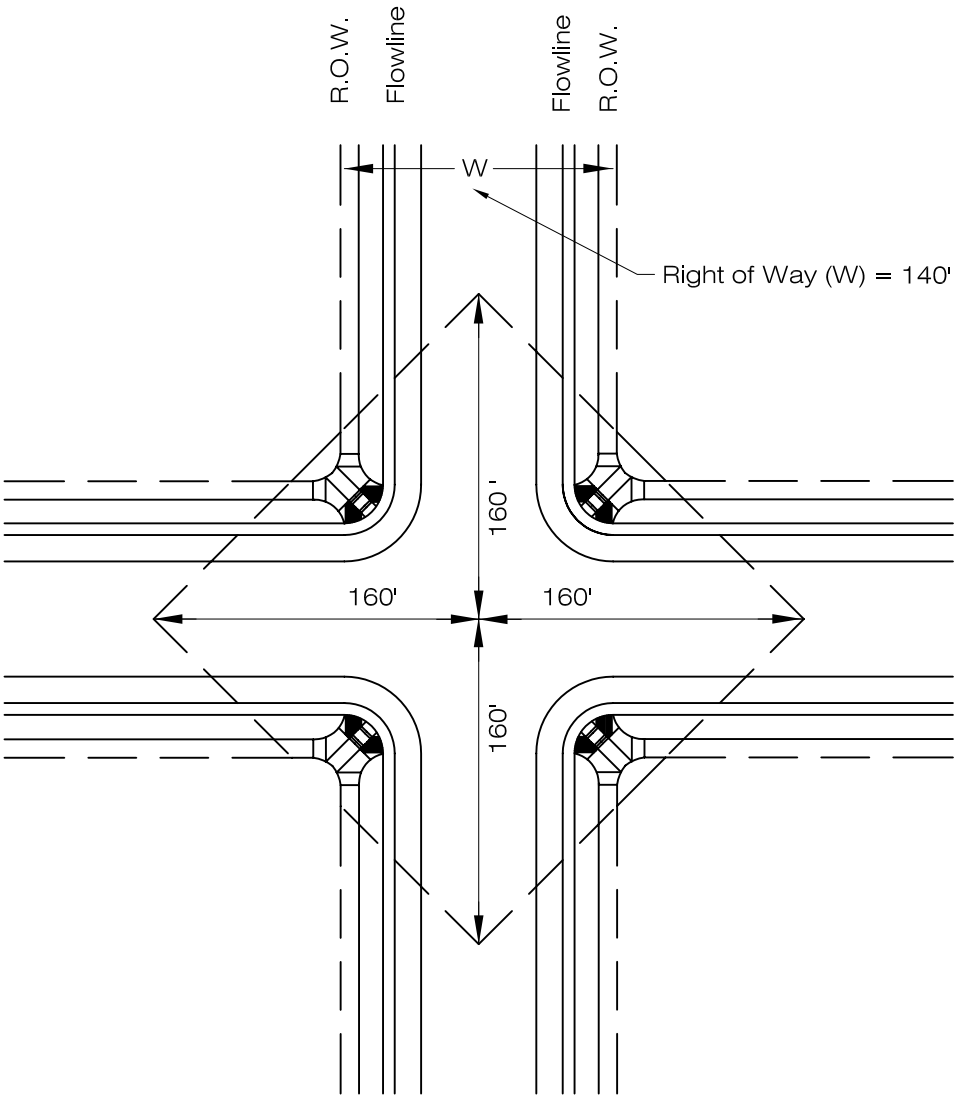

6 LANE ARTERIAL

NOTE:

The Local Entity may require the Developer to provide Right-of-Way for future Roundabout locations on any Major Collector or 2, 4 or 6 lane Arterial.

ARTERIAL INTERSECTION RIGHT-OF-WAY REQUIREMENTS

LARIMER COUNTY URBAN AREA STREET STANDARDS	DESIGN FIGURE	REVISION NO:	FIGURE
		DATE: 01/24/01	8-16L

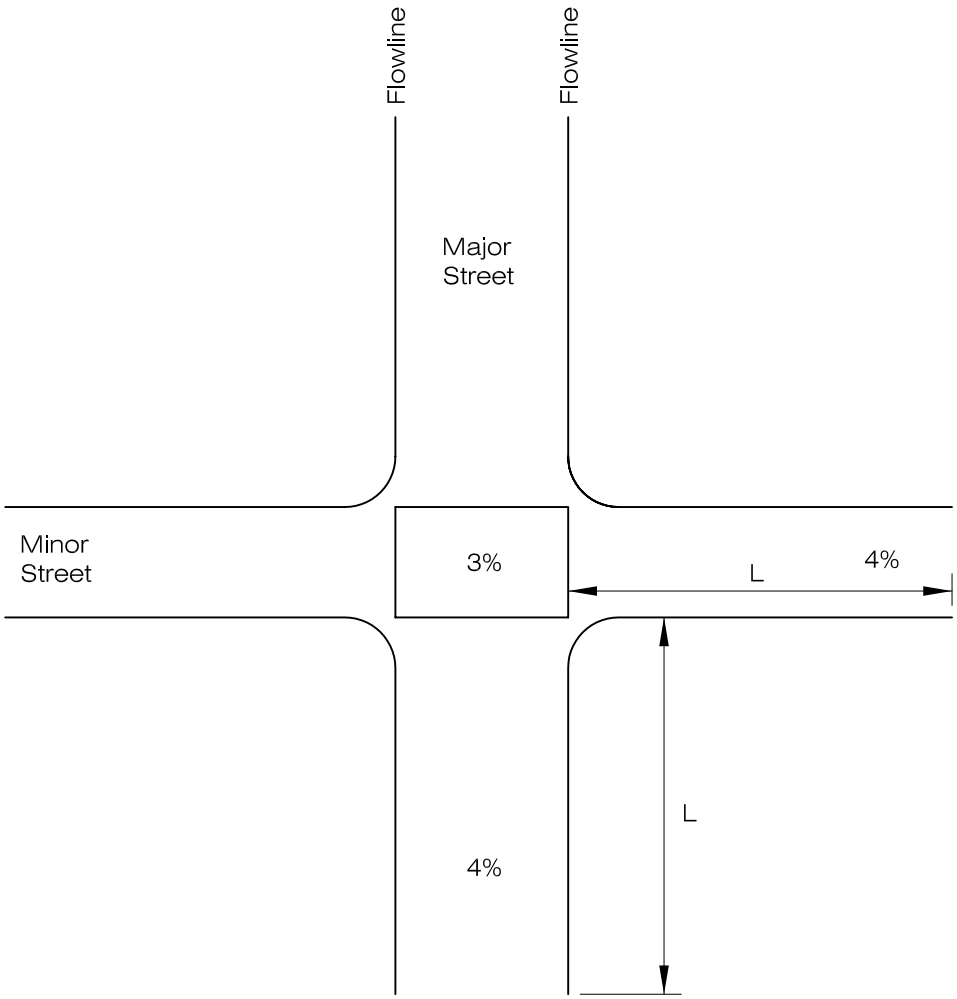

INTERSECTION GRADE CONTROL LENGTHS (L)

MINOR LEG	LOCAL	COLLECTOR	ARTERIAL
Private Drives	65 ft	65 ft	75 ft
Local	95 ft	100 ft	125 ft
Collector	100 ft	120 ft	200 ft
Arterial	125 ft	200 ft	200 ft

INTERSECTION GRADES

LARIMER COUNTY URBAN AREA STREET STANDARDS	DESIGN FIGURE	REVISION NO:	FIGURE
		DATE: 08/07/00	8-17

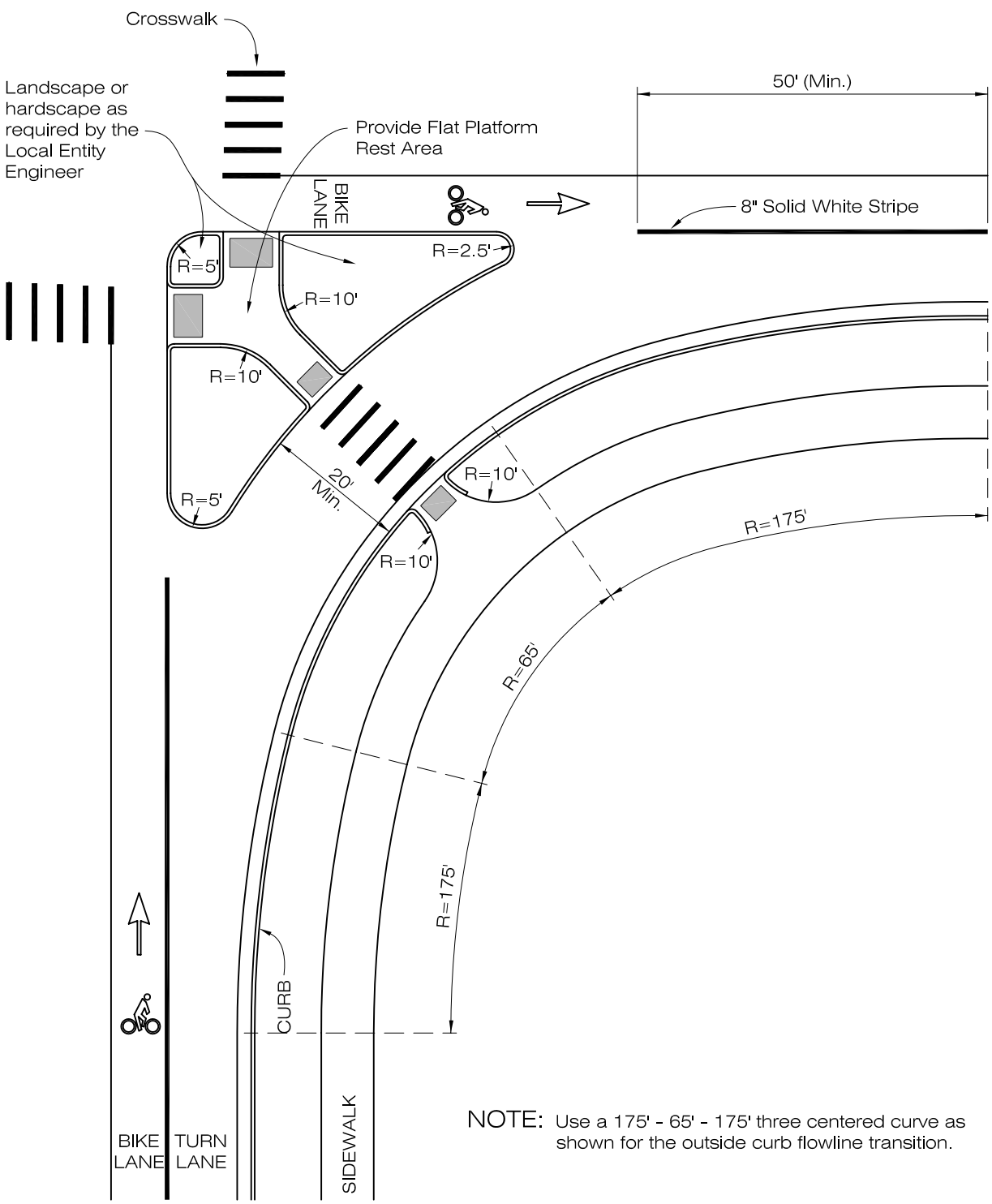

NOTE: Use a 175' - 65' - 175' three centered curve as shown for the outside curb flowline transition.

RT TURN LANE TO A CONTINUOUS LANE W/PED. REFUGE

LARIMER COUNTY URBAN AREA STREET STANDARDS	DESIGN FIGURE	REVISION NO:	FIGURE
		DATE: 02/02/01	8-18

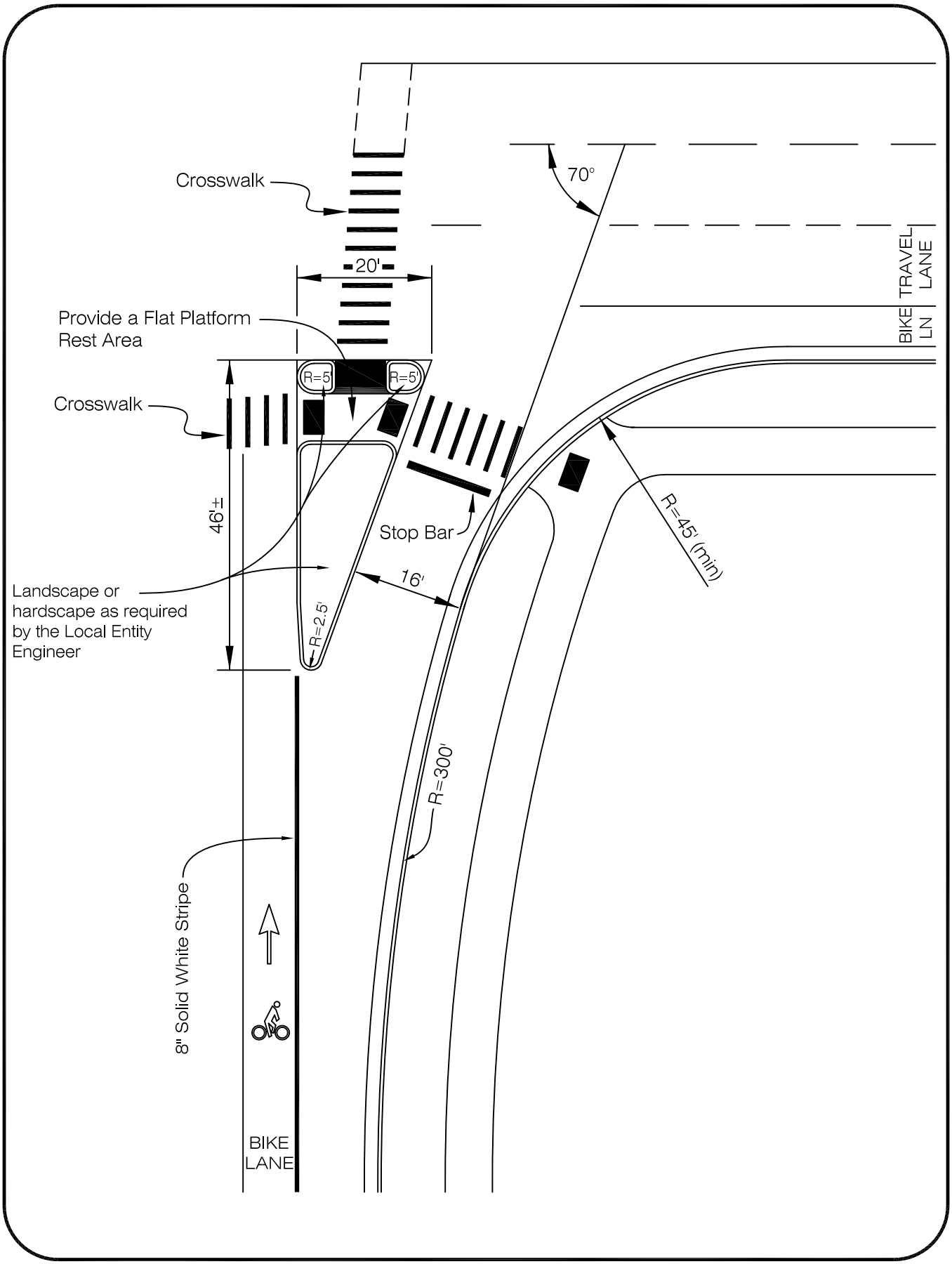

PEDESTRIAN REFUGE ISLAND/RIGHT TURN LANE

LARIMER COUNTY URBAN AREA STREET STANDARDS	DESIGN FIGURE	REVISION NO:	FIGURE
		DATE: 07/01/21	8-19

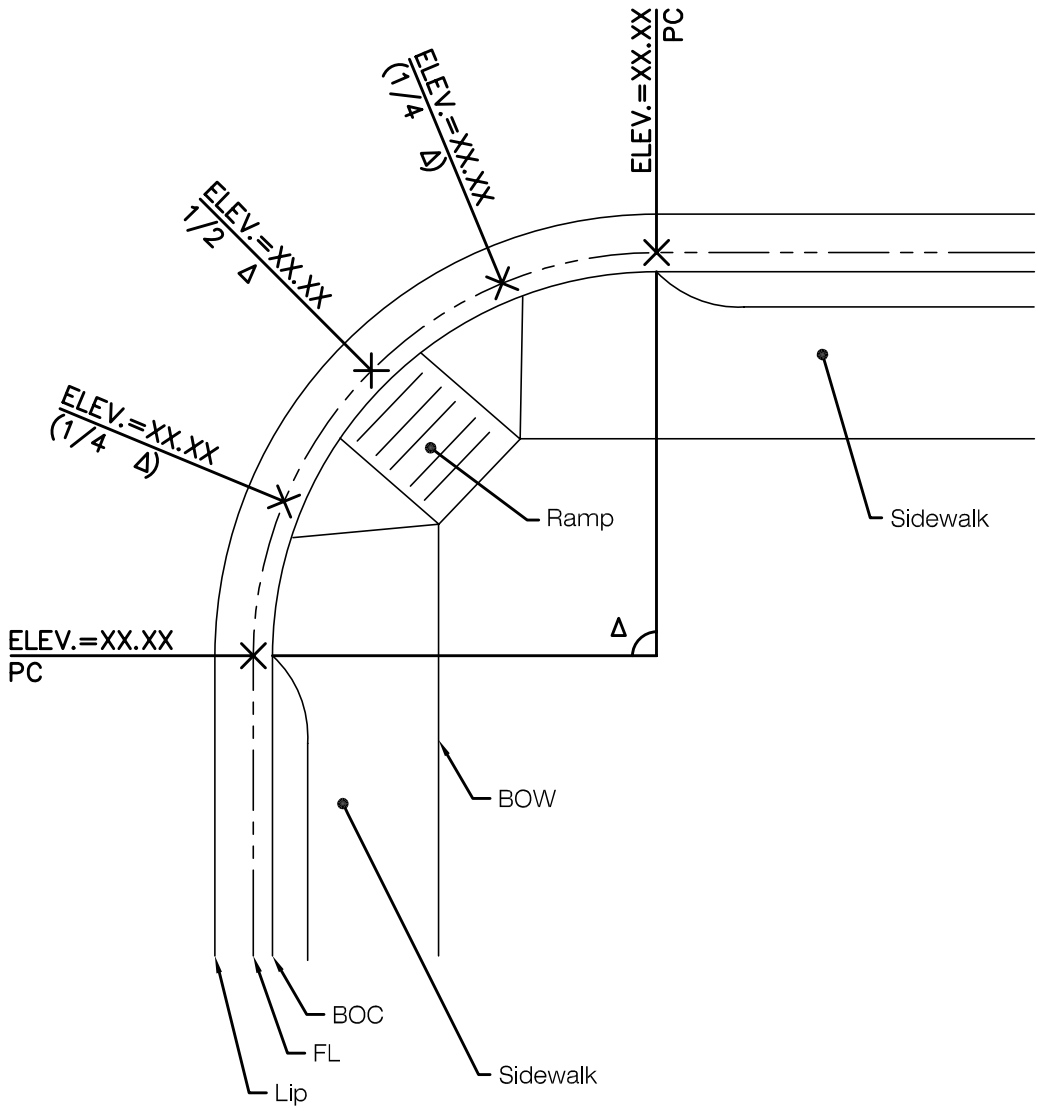

REQUIRED SPOT ELEVATIONS FOR CURB RETURNS

LARIMER COUNTY URBAN AREA STREET STANDARDS	DESIGN FIGURE	REVISION NO:	FIGURE
		DATE: 04/01/07	8-20

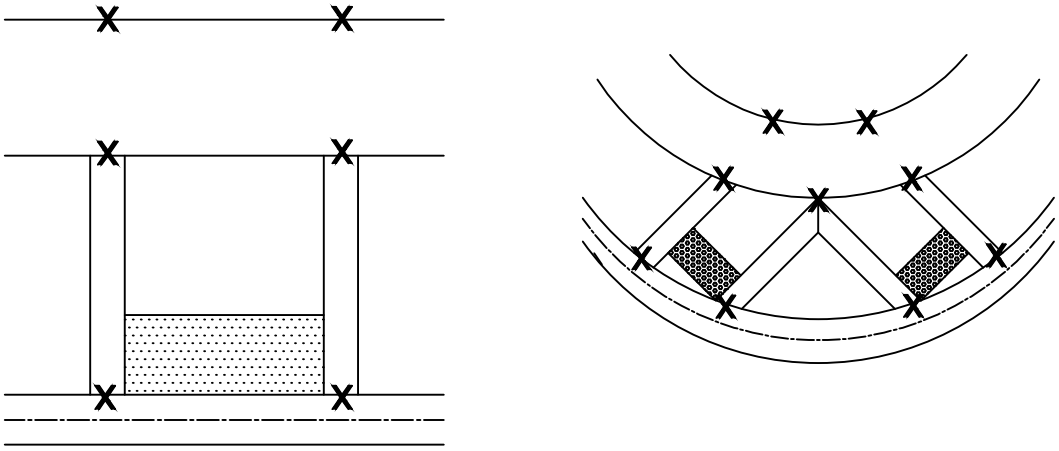

RAMPS & DETACHED SIDEWALK

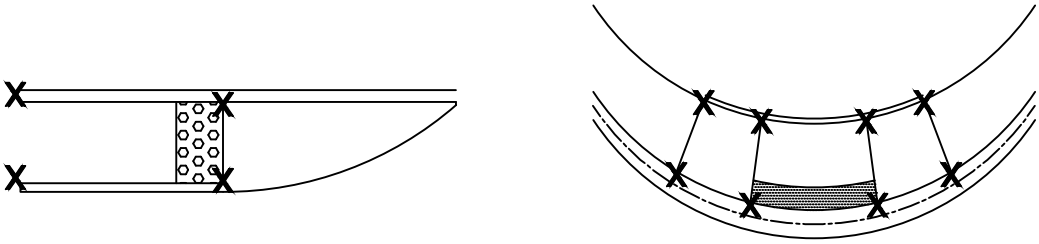

RAMPS WITH ATTACHED SIDEWALK

NOTE: CROSS SLOPES AND RUNNING SLOPES ON CURB RAMPS SHALL BE ADA COMPLIANT.

REQUIRED SPOT ELEVATIONS FOR CURB RAMPS

LARIMER COUNTY URBAN AREA STREET STANDARDS	CONSTRUCTION DRAWINGS	REVISION NO:	FIGURE
		DATE: 07/01/21	8-20.1

LOVELAND ONLY

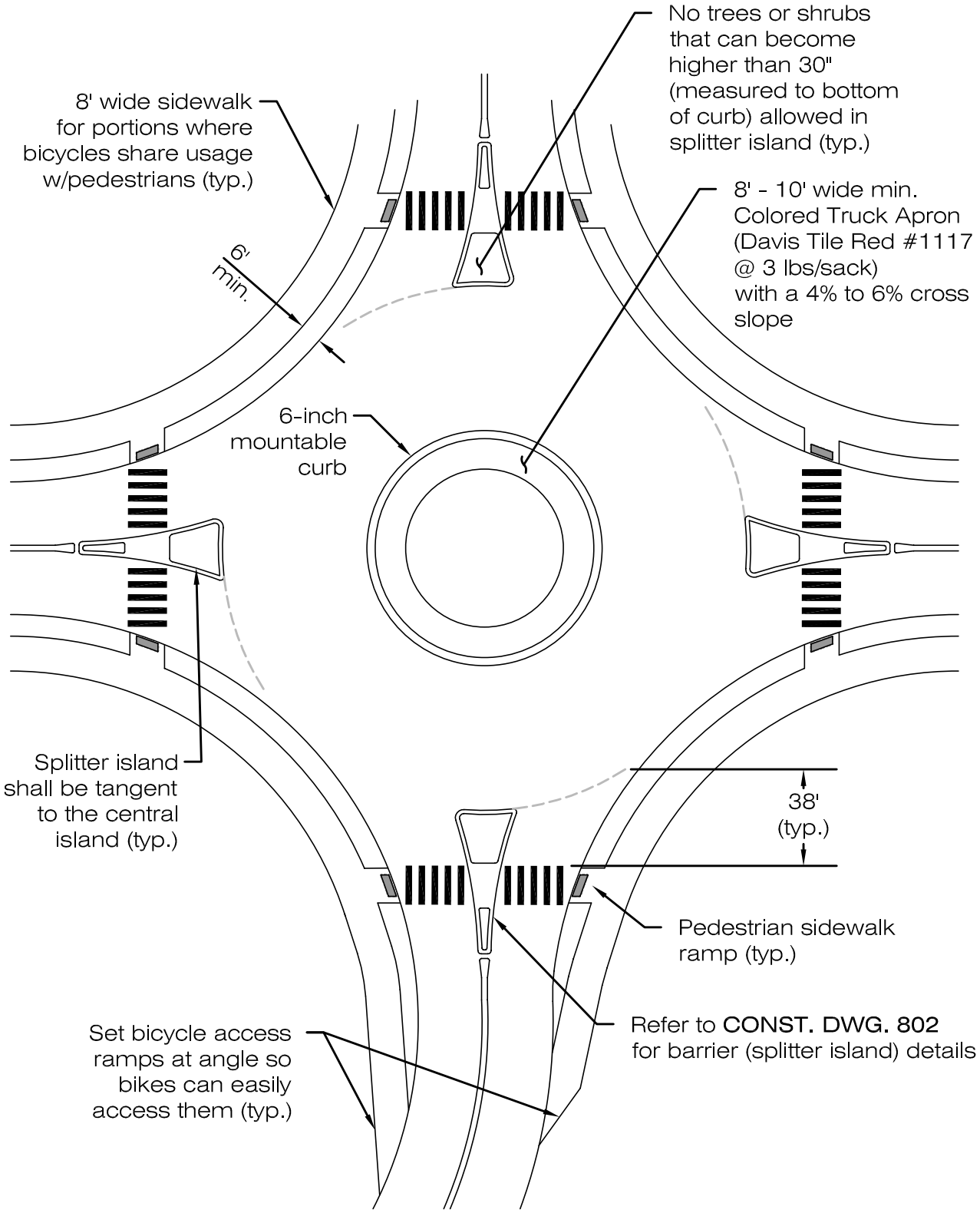

TYPICAL ROUNDABOUT

LARIMER COUNTY URBAN AREA STREET STANDARDS	DESIGN FIGURE	REVISION NO: 2	FIGURE
		DATE: 04/01/07	8-21